INSTALLATION INSTRUCTIONS

2017-2024 FORD F250/350 4WD

6” 4-LINK SYSTEM

FT22221i

To see this kit in action **click here**

Fabtech Motorsports | 2213 Industrial Park Rd. Lancaster, SC 29720
Tech Line: 909-597-7800 | **Web:** www.fabtechmotorsports.com

2017-2022 Models

	K2219	6” 4-LINK SYSTEM W/PERFORMANCE SHOCKS
1	FTS22221	6” 4-LINK SYSTEM BOX 1
1	FTS22222	6” 4-LINK SYSTEM BOX 2
1	FTS22219	REAR BOX KIT
2	FTS7188	PERFORMANCE SHOCK (FRONT)
2	FTS7266	PERFORMANCE SHOCK (REAR)

	K2219M	6” 4-LINK SYSTEM W/ STEALTH SHOCKS
1	FTS22221	6” 4-LINK SYSTEM BOX 1
1	FTS22222	6” 4-LINK SYSTEM BOX 2
1	FTS22219	REAR BOX KIT
2	FTS6188	STEALTH MONOTUBE SHOCK (FRONT)
2	FTS6063	STEALTH MONOTUBE SHOCK (REAR)

	K2219DL	6” 4-LINK SYSTEM W/ DLSS SHOCKS
1	FTS22221	6” 4-LINK SYSTEM BOX 1
1	FTS22222	6” 4-LINK SYSTEM BOX 2
1	FTS22219	REAR BOX KIT
2	FTS810382	2.25 DIRT LOGIC SS N/R (FRONT)
2	FTS810052	2.25 DIRT LOGIC SS N/R (REAR)

2023-2024 Models

	K2417	6” 4-LINK SYSTEM W/PERFORMANCE SHOCKS
1	FTS22024BK	6” COIL BOX
1	FTS22375	6” 4-LINK SYSTEM BOX 1
1	FTS22222	6” 4-LINK SYSTEM BOX 2
1	FTS22219	REAR BOX KIT
2	FTS7188	PERFORMANCE SHOCK (FRONT)
2	FTS7266	PERFORMANCE SHOCK (REAR)

	K2417M	6” 4-LINK SYSTEM W/ STEALTH SHOCKS
1	FTS22024BK	6” COIL BOX
1	FTS22375	6” 4-LINK SYSTEM BOX 1
1	FTS22222	6” 4-LINK SYSTEM BOX 2
1	FTS22219	REAR BOX KIT
2	FTS6188	STEALTH MONOTUBE SHOCK (FRONT)
2	FTS6063	STEALTH MONOTUBE SHOCK (REAR)

	K2417DL	6” 4-LINK SYSTEM W/ DLSS SHOCKS
1	FTS22024BK	6” COIL BOX
1	FTS22375	6” 4-LINK SYSTEM BOX 1
1	FTS22222	6” 4-LINK SYSTEM BOX 2
1	FTS22219	REAR BOX KIT
2	FTS810382	2.25 DIRT LOGIC SS N/R (FRONT)
2	FTS810052	2.25 DIRT LOGIC SS N/R (REAR)

	K2418DL	6” 4-LINK SYSTEM W/ DLSS SHOCKS
1	FTS22024BK	6” COIL BOX
1	FTS22375	6” 4-LINK SYSTEM BOX 1
1	FTS22222	6” 4-LINK SYSTEM BOX 2
1	FTS22219	REAR BOX KIT
2	FTS800382	2.25 DIRT LOGIC SS RESI (FRONT)
2	FTS810052	2.25 DIRT LOGIC SS N/R (REAR)

	K2419DL	6” 4-LINK SYSTEM W/ DLSS COILOVERS
1	FTS22375	6” 4-LINK SYSTEM BOX 1
1	FTS22222	6” 4-LINK SYSTEM BOX 2
1	FTS22219	REAR BOX KIT
2	FTS22248	2.5 DIRT LOGIC C/O SS RESI (FRONT)
2	FTS810052	2.25 DIRT LOGIC SS N/R (REAR)

	FTS22024BK	6” FORD F250/350 FRONT COILS
2	FT30123BK	6” FRONT COIL

	FTS22250	6” FORD F250/350 FRONT GAS COILS
2	FT30732	6” FRONT COIL

	FTS22221	4-LINK SYSTEM BOX 1 (2017-2022)
2	FT30129BK	LOWER LINK
2	FT30692	UPPER LINK
2	FT30650	4-LINK POCKET

	FTS22375	4-LINK SYSTEM BOX 1 (2023-UP)
2	FT31085	LOWER LINK
2	FT31084	UPPER LINK
2	FT31083	4-LINK POCKET
2	FT31080	NUT TAB
1	FT31088	HARDWARE KIT
1	FT31135	BRAKELINE BRACKET

	FT31088 - HARDWARE KIT	LOCATION
4	3/4-10 X 5” HEX BOLT	4-LINK
16	3/4” SAE WASHER	
8	3/4-10 C-LOCK NUT	
4	3/4-10 X 1-1/2” HEX BOLT	4-LINK BRACKET
6	1/2-13 X 1-1/2” HEX BOLT	
10	1/2” SAE WASHER	
4	1/2-13 C-LOCK NUT	
2	1/2” SPLIT LOCK WASHER	
1	THREAD LOCKING COMPOUND 1 MIL	

	FTS22219	6” REAR BOX KIT
4	FT742U	U-BOLT RD 5/8-18 X 18.00 X 3.50
1	FTBK54D	BLOCK (DRIVER)
1	FTBK54P	BLOCK (PASSENGER)
1	FT58H	5/8” U-BOLT HARDWARE KIT

	FTS22222	6” 4-LINK SYSTEM BOX 2
1	FT30122	PITMAN ARM
2	FT30654	6” BUMP STOP EXT
1	FT30956	TRACK BAR DROP BRACKET
1	FT30670	HARDWARE KIT
1	FT30676	HARDWARE SUBASSEMBLY
1	FT30672	STEERING STABILIZER BRACKET
1	FT30686	STEERING STABILIZER CLEVIS MOUNT
1	FT30630	SWAY BAR DROP (DRIVER)
1	FT30629	SWAY BAR DROP (PASSENGER)

	FT30676	HARDWARE SUBASSEMBLY
1	FT22221i	INSTRUCTIONS
8	FT147	MISALIGNMENT
1	FT30258	SECTOR SHAFT NUT
2	FT30660	BRAKE LINE TAB
2	FT50290	BUMP STOP NUT TAB
1	FT30604	SPACER
1	FT292	ALIGNMENT CAM KIT
1	FTAS12	STICKER FT BLUE 10X4 DIE CUT
1	FTAS16	DRIVER WARNING DECAL
1	FTREGCARD	REGISTRATION CARD

	FT30670- HARDWARE KIT	LOCATION
8	7/16 SAE WASHER G8 ZINC	SWAY BAR
4	7/16-14 C-LOCK NUT ZINC	
4	7/16-14 X 1 1/4 HEX HD	
2	3/8-16 X 1” HEX BOLT	BRAKE LINE
4	3/8” SAE WASHER	
2	3/8-16 NYLOCK NUT	
2	1/4 SAE WASHER	
1	1/4-20 GR C-LOCK NUT	
1	1/4-20 X 3/4 HEX BOLT G5 ZINC	
2	1/2-13 X 1-1/4 HEX BOLT	BUMP STOP
2	1/2-13 X 1-1/2 HEX BOLT	
6	1/2 SAE WASHER	
2	1/2-13 C-LOCK NUT	
4	3/4-10 X 1-1/2” HEX BOLT	4-LINK
2	3/4-10 X 5” HEX BOLT	
16	3/4 SAE WASHER	
8	3/4-10 C-LOCK NUT	
1	COTTER PIN	
1	M12-1.75 X 70MM HEX BOLT	STEERING STABILIZER
2	M12 WASHER	
1	M12-1.75 C-LOCK	
1	9/16-12 NYLOCK NUT	
3	9/16 SAE WASHER	
1	THREAD LOCKING COMPOUND 1 MIL	
1	HOSE CLAMP	

- TOOL LIST -

Required Tools (Not Included)

-Basic Hand Tools
-Assorted Metric and S.A.E sockets, and Allen wrenches
-Torque Wrench
-Die Grinder w/ Cutoff Wheel or Sawzall
- 1-1/4” Hole Saw
-Basic Hand Tools
-Floor Jack
-Jack Stands
-Drill

- PRE-INSTALLATION NOTES -

For technical assistance call: **909-597-7800** or e-mail: **info@fabtechmotorsports.com**

READ THIS BEFORE YOU BEGIN INSTALLATION -

Check all parts to the parts list above before beginning installation. If any parts are missing contact Fabtech at 909-597-7800 and a replacement part will be sent to you immediately.

Read all instructions thoroughly from start to finish before beginning the installation. If these instructions are not properly followed severe frame, driveline and / or suspension damage may occur.

Check your local city and state laws prior to the installation of this system for legality. Do not install if not legal in your area.

Prior to the installation of this suspension system perform a front end alignment and record. Do not install this system if the vehicle alignment is not within factory specifications. Check for frame and suspension damage prior to installation.

The installation of this suspension system should be performed by two professional mechanics.

This suspension must be installed with Fabtech shock absorbers.

Use the provided thread locking compound on all hardware.

WARNING- Installation of this system will alter the center of gravity of the vehicle and may increase roll over as compared to stock.

Vehicles that receive oversized tires should check ball joints, uniballs, tie rods ends, pitman arm and idler arm every 2500-5000 miles for wear and replace as needed.

Verify differential fluid is at manufactures recommended level prior to kit installation. Installation of the kit will reposition the differential and the fill plug hole may be in a different position. (For example, if the manufacture recommends 3 quarts of fluid, make sure the diff has 3 quarts of fluid). Check your specific manual for correct amount of fluid.

Recommend Tires and Wheels:

-Use 38/12.50R17 tire - 17x9 w/ 4-3/4” BS Wheel w/minor trimming
-Use 38/12.50R18 tire - 18x9 w/ 4-3/4” BS Wheel w/minor trimming
-Use 38/12.50R20 tire - 20x9 w/ 5” BS Wheel w/minor trimming
-Use 40/12.50R17 tire - 17x9 w/ 4-3/4” BS Wheel w/minor trimming
-Use 40/12.50R18 tire - 18x9 w/ 4-3/4” BS Wheel w/minor trimming
-Use 40/12.50R20 tire - 20x9 w/ 5” BS Wheel w/minor trimming

FOOTNOTES -

- NON DUALLY MODELS ONLY
- (**GAS MODELS**) FRONT DRIVESHAFT MODIFICATION IS REQUIRED OR ORDER DRIVESHAFT (FTS92036)
- VEHICLES EQUIPPED WITH 2 PIECE REAR DRIVE SHAFT REQUIRE PART #FTS419
- VEHICLES W/ FACTORY REAR SWAY BAR MUST ORDER EXTENDED SWAY BAR LINK KIT PART NUMBER FTS22276.
- SOME 2017 MODELS MAY REQUIRE A DUAL STEERING STABILIZER TO ADDRESS STEERING FEEDBACK. ORDER DIRT LOGIC-FTS220512, DIRT LOGIC W/RESI-FTS221162 OR STEALTH-FTS8046

- INSTRUCTIONS -

FRONT SUSPENSION

1. Disconnect the negative terminal on the battery. Jack up the front end of the truck and support the frame rails with jack stands. **NEVER WORK UNDER AN UNSUPPORTED VEHICLE!** Remove the front tires.

2. Disconnect the sway bar from the sway bar end links and frame. Remove sway bar. Save hardware. **SEE FIGURE 1**

FIGURE 1 - STEP 2

3. Disconnect the brake line from the frame and axle on both driver and passenger sides. Save hardware. **SEE FIGURES 2-3**

FIGURE 2 - STEP 3

FIGURE 3 - STEP 3

4. Remove the front shocks and discard, save hardware.

5. Lower the front axle allowing the coil springs to come free of tension and remove the coil springs. EXERCISE EXTREME CAUTION WHEN WORKING WITH COIL SPRINGS UNDER LOAD!

6. Disconnect the factory steering stabilizer from the frame mount. Remove the steering stabilizer frame bracket. Discard the frame bracket. Save all hardware.

7. Remove the drag link from the pitman arm. **Use care not to damage the threads on the drag link.**

8. Disconnect the trac bar from the frame bracket. Remove the trac bar bracket from the frame, save the original hardware and discard the factory trac bar bracket.

9. Remove the factory pitman arm from the steering box using a large pitman arm puller. Discard hardware and arm.

10. Install FT30122 (Pitman Arm) using the supplied FT30258 (Sector shaft nut). Torque to 350 ft-lbs. **NOTE: This is a one time only use nut. If remove, it must be discarded.**

11. Locate FT30956 (Track Bar Bracket). Attach to the frame using the original hardware in the same position. Torque bolts to 120 ft-lbs. DO NOT ATTACH THE TRAC BAR TO THE FRAME BRACKET AT THIS TIME. **SEE FIGURES 4-5**

FIGURE 4 - STEP 11

FIGURE 5 - STEP 11

12. Working from both sides of the truck, locate and remove the factory front bump stops and save. Pull on the bump stop itself to free from the cup. Remove the factory mounting cup from the frame and discard the hardware. Drill out the center hole on the factory cup to 1/2”. **SEE FIGURES 6-7**

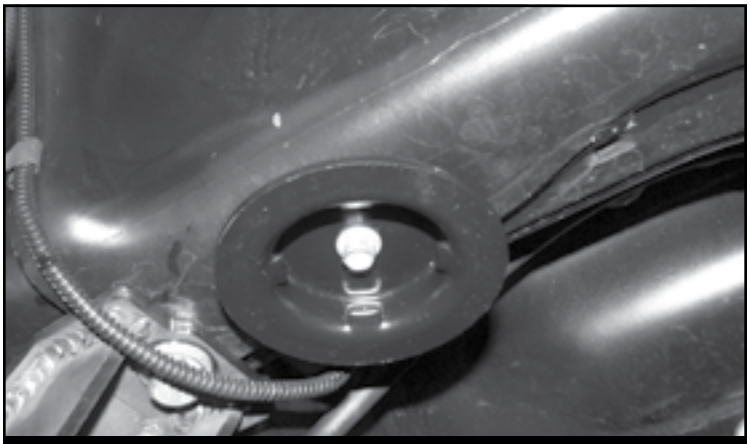

FIGURE 6 - STEP 12

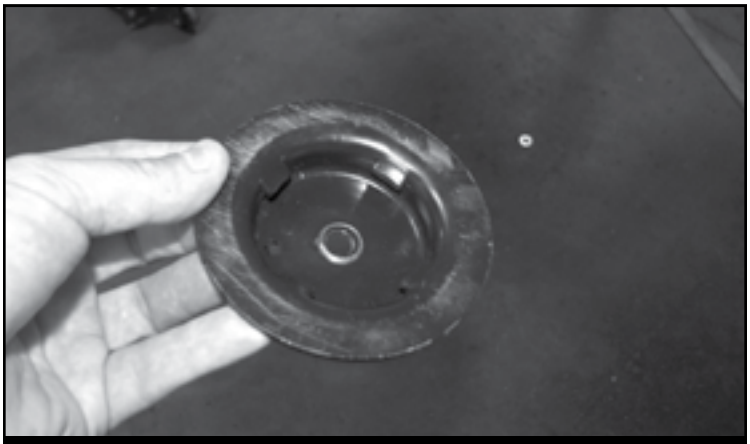

FIGURE 7 - STEP 12

13. Install FT30654 (Bump Stop Extension) onto the factory cup using the supplied 1/2” x 1-1/4” hardware and set aside. Torque to 127 ft-lbs. **SEE FIGURE 8**

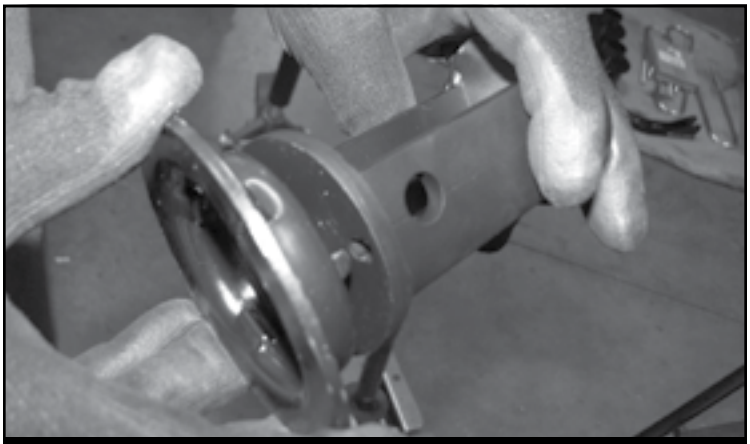

FIGURE 8 - STEP 13

14. Locate the factory bump stop mounting hole. Measure 3” straight up from the bottom of the frame. Mark and drill a 1-1/4” hole using a hole saw into the frame. **SEE FIGURES 9-10**

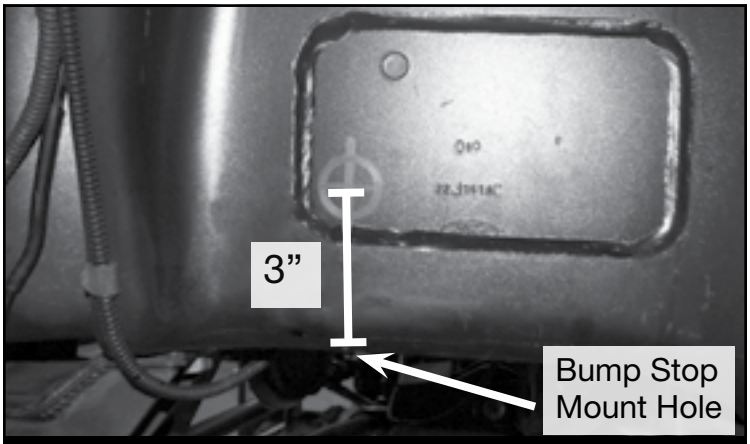

FIGURE 9 - STEP 14

FIGURE 10 - STEP 14

15. Drill out the factory bump stop mount hole to 1/2”. **SEE FIGURE 11**

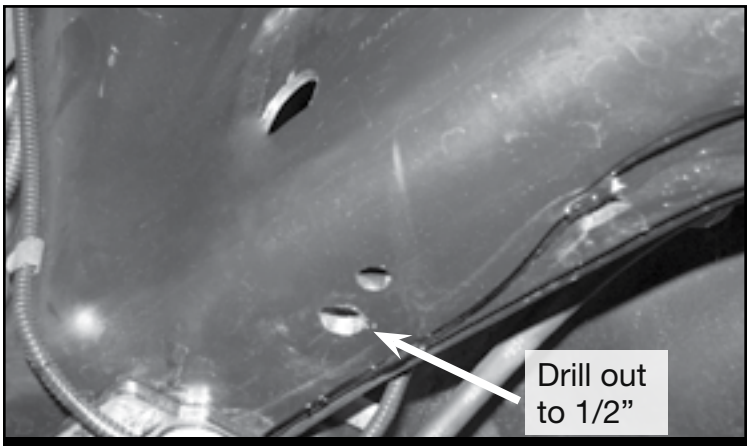

FIGURE 11 - STEP 15

16. Using FT50290 (Nut Tab) and 1/2 X 1-1/2” bolt and washer. Mount the new bump stop extension to the frame. Route the Nut tab through the 1-1/4” hole that was made in Step 11. Torque to 127 ft-lbs. **SEE FIGURE 12**

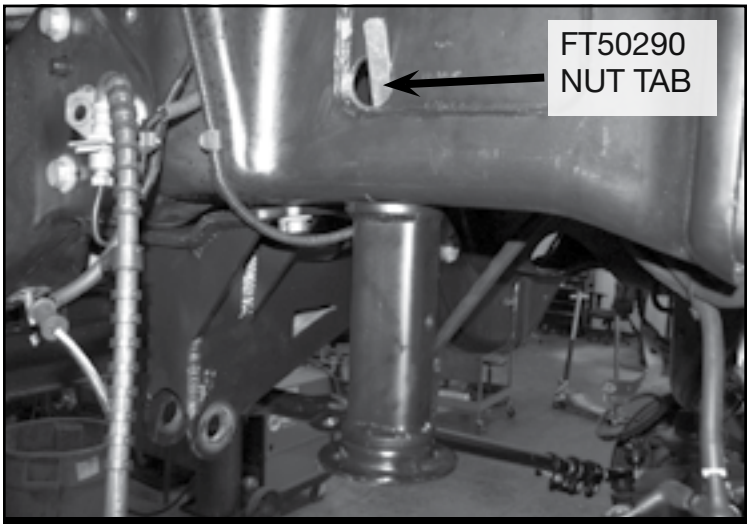

FIGURE 12 - STEP 16

REPEAT BUMP STOP INSTALLATION ON PASSENGER SIDE

17. With the front axle still supported by the floor jack, remove the Driver side factory radius arm.

2017-2022 Models Only

18. Locate FT30650 (4-Link pocket). Install the bracket into the factory radius arm pocket using the supplied ¾” x 1-1/2” bolts, nuts and washers through the original rear holes in the frame. Leave loose. **SEE FIGURE 13**

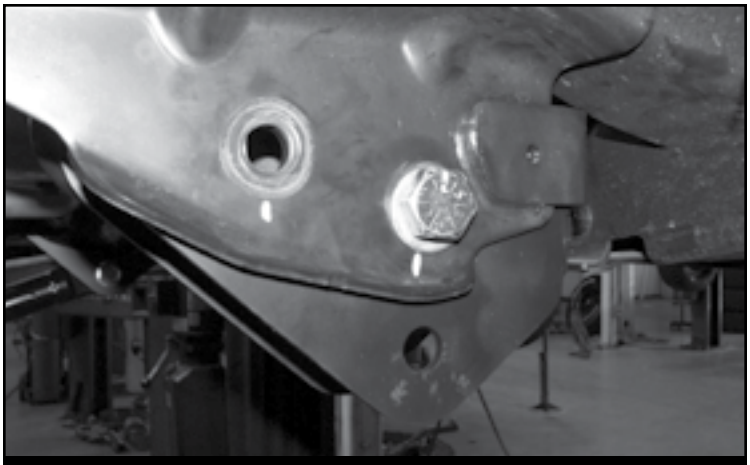

FIGURE 13 - STEP 18

19. Locate FT30129BK (Lower Link) and (2) FT147 (Misalignments). Install the link into the new bracket “lower hole” using the supplied 3/4” X 5” Hardware. Install the FT292 (Alignment Cam kit) hardware at the axle side. Locate FT30692 (Upper Link) and (2) FT147 (Misalignments). Install the link into the new bracket forward upper hole” using the supplied 3/4” X 5” Hardware. Use the factory hardware at the axle mount. Torque 3/4” hardware to 380 ft-lbs, and factory axle bolts/ alignment cams to 287 ft-lbs. **SEE FIGURES 14-15**

FIGURE 14 - STEP 19

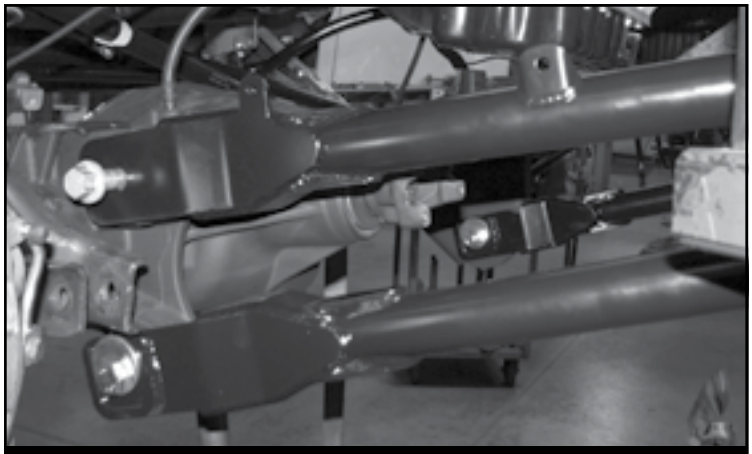

FIGURE 15 - STEP 19

- **REPEAT STEPS 17-19 ON PASSENGER SIDE**

2023-2024 Models Only

20. Install FT31083 (4-Link Bracket) to the factory radius arm pocket using the supplied 3/4” x 1-1/2” Bolts, washers and nuts and 1/2” x 1-1/2” bolts, washers and nuts. **NOTE: The 1/2” bolt location will need to be drilled out to accommodate the 1/2” hardware.** Locate the foward hole on the new bracket, use this to mark the frame. Remove the bracket and drill the factory frame using a 1/2” drill bit. Reinstall the bracket. **Install hardware on both sides of the pocket. SEE FIGURE 16**

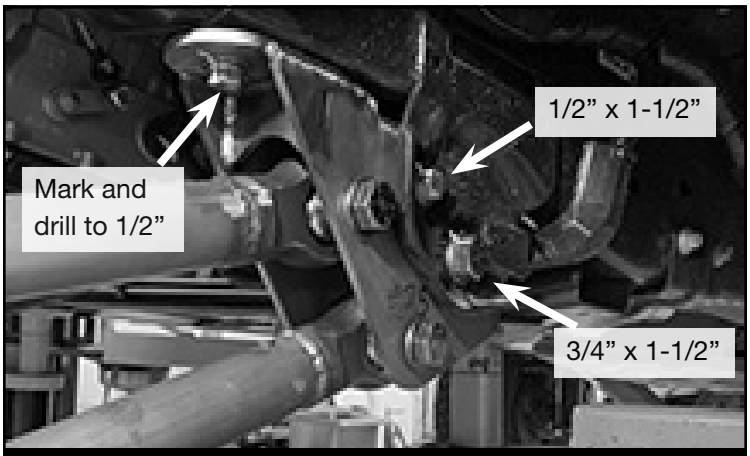

FIGURE 16 - STEP 20

21. Install the supplied FT31080 (Nut Tab) through the factory frame opening and install the 1/2” x 1-1/2” bolt, washer and split washer to attach the new 4-link bracket to the frame. **SEE FIGURE 17.** Torque 3/4” hardware to 380 ft-lbs and the 1/2” hardware to 106 ft-lbs.

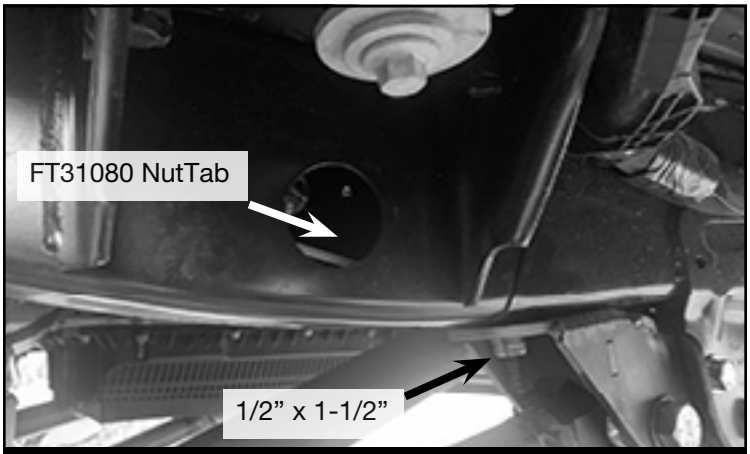

FIGURE 17 - STEP 21

22. Locate FT31085 (Lower Link) and (2) FT147 (Misalignments). Install the link into the new bracket “lower hole” using the supplied 3/4” X 5” Hardware. Install the FT292 (Alignment Cam kit) hardware at the axle side. Locate FT31084 (Upper Link) and (2) FT147 (Misalignments). Install the link into the new bracket forward upper hole” using the supplied 3/4” X 5” Hardware. Use the factory hardware at the axle mount. Torque 3/4” hardware to 380 ft-lbs, and factory axle bolts/ alignment cams to 287 ft-lbs. **SEE FIGURES 18-19 as well as FIGURES 13-16 for the correct orientation of the link arms.**

FIGURE 18 - STEP 22

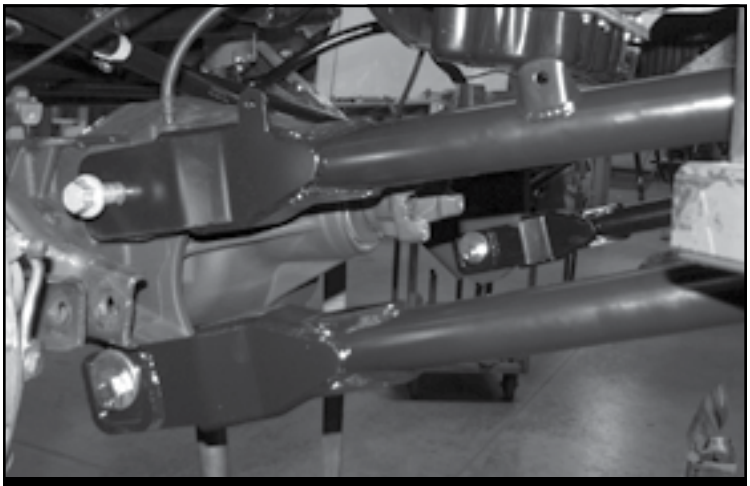

FIGURE 19 - STEP 22

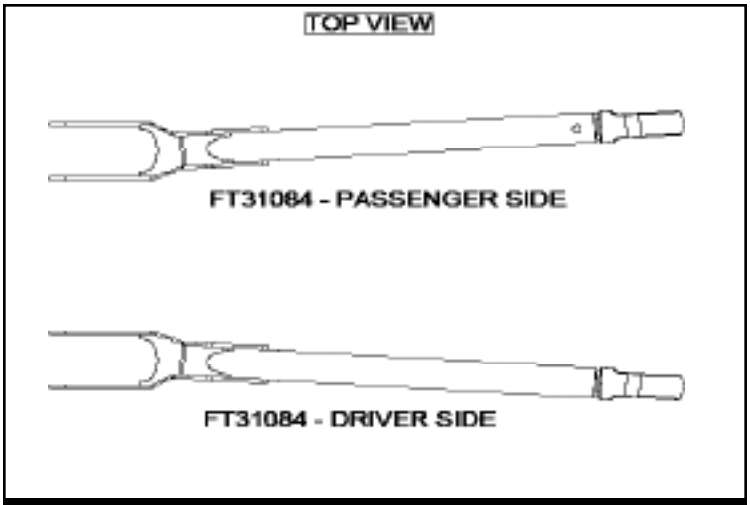

FIGURE 20 - STEP 22

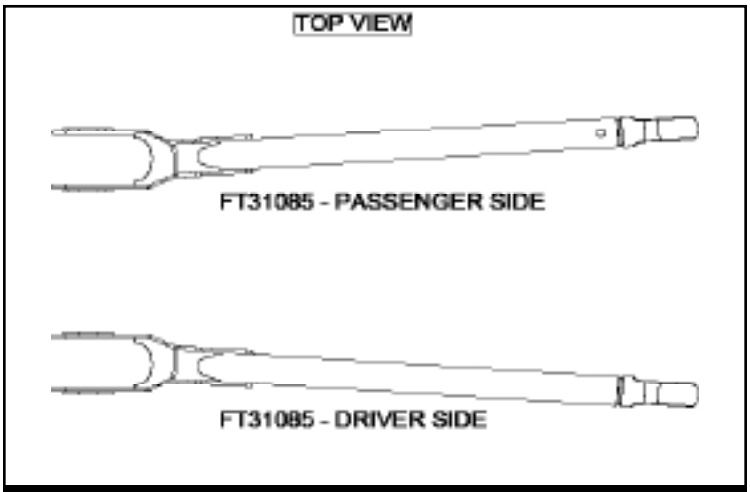

FIGURE 21 - STEP 22

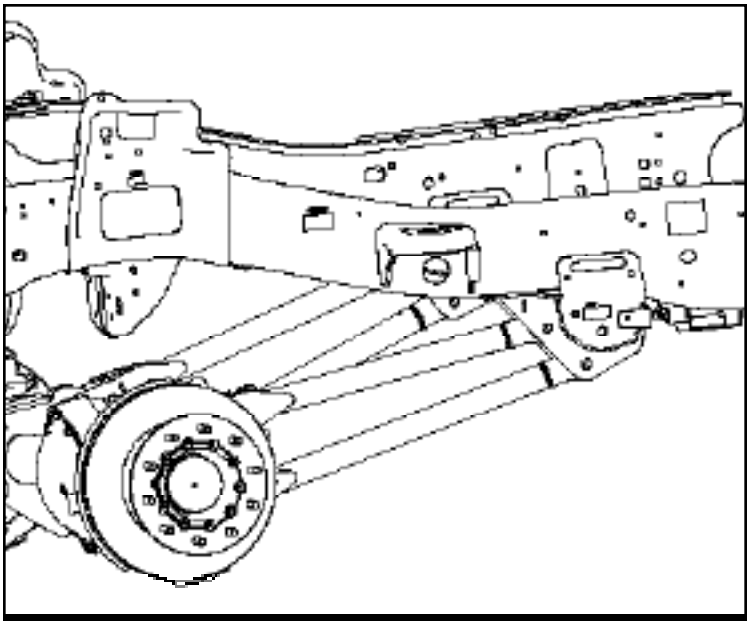

FIGURE 22 - STEP 22

23.

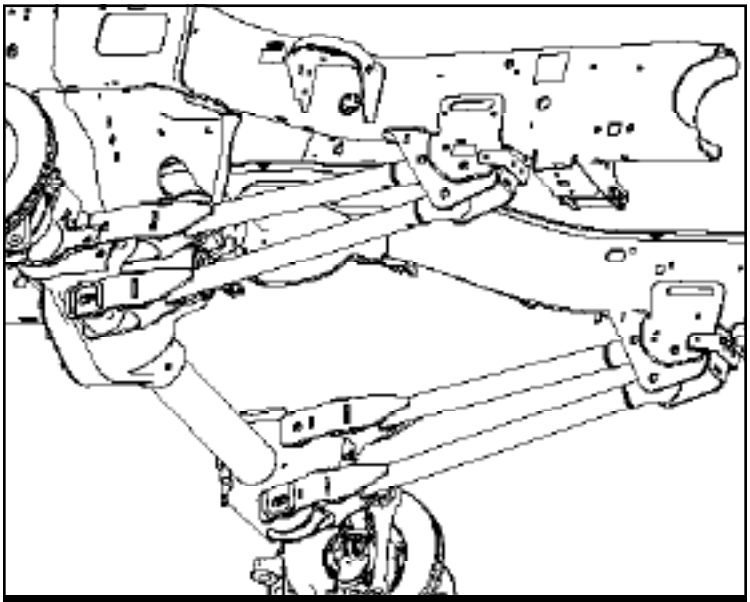

FIGURE 23 - STEP 22

- **REPEAT STEPS ON PASSENGER SIDE**
- **IF INSTALLING A COILOVER CONVERSION KIT, DO SO NOW THEN SKIP TO STEP 26**

24. Install FT30123BK (Coil Spring) using the factory upper isolator. **SEE FIGURE 24**

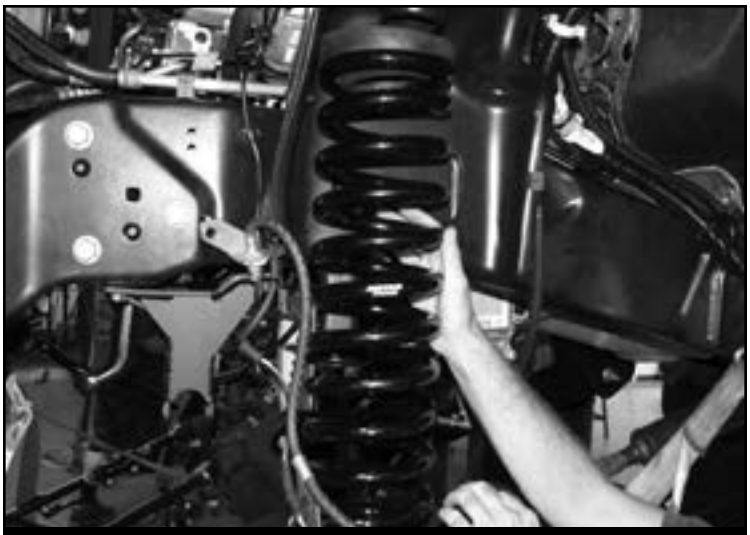

FIGURE 24 - STEP 24

25. Install the new front shocks FTS7188, FTS6188 or FTS810382 with the supplied bushing kits. Using the factory hardware. **NOTE: Install a supplied 9/16" washer at the lower mount to fill up the gap between the bushing and mount.** Due to vehicle variances the top of the lower shock mount may need to be sanded down to clear the shock body only if installing Stealth shocks. Torque the lower hardware to 111 ft-lbs and the upper to 46 ft-lbs. **SEE FIGURE ON LAST PAGE.**

26. Reinstall the track bar to the new frame bracket. Torque to 406 ft-lbs. Install the drag link to the new Fabtech pitman arm using the factory hardware and the new supplied cotter pin. Torque to 129 ft-lbs. **NOTE: The drag link will need to be rotated 180 degrees and installed from the bottom side of the pitman arm. SEE FIGURE 25**

FIGURE 25 - STEP 26

27. **(DRIVER SIDE)** Install FT30660 (Brake line bracket) to the factory brake line tab using the supplied 3/8" hardware. Next, install the bracket to the frame using the factory hardware. Torque hardware to 52 ft-lbs. **SEE FIGURE 26**

FIGURE 26 - STEP 27

28. **(PASSENGER SIDE)** Install FT30660 (Brake line bracket) to the factory brake line tab using the supplied 3/8" hardware (Use lower hole). Next, using the supplied rubber clamp and 1/4" hardware, attach the ABS line to the upper hole on the FT30660 bracket. Re attach to the frame using the factory hardware. Torque 3/8" & factory hardware to 52 ft-lbs. Torque 1/4" hardware to 14 ft-lbs. **SEE FIGURE 27**

FIGURE 27 - STEP 28

29. Install FT30672 (steering stabilizer drop bracket) in the factory location using the factory hardware. Torque to 52 ft-lbs. **SEE FIGURE 28**

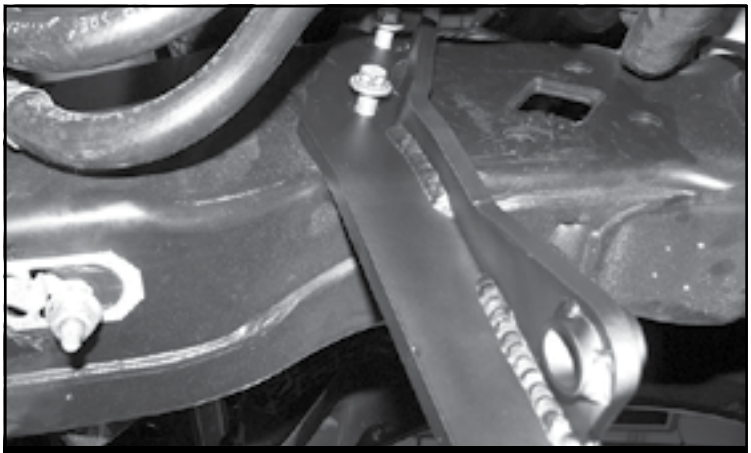

FIGURE 28 - STEP 29

30. Install FT30686 (Stabilizer Clevis) on the factory steering stabilizer using the supplied M12 hardware. **NOTE: Install FT30604 (spacer) like shown in the figure below.** Install the stabilizer using the supplied 1/2" washer and nut to the drag link. Using the factory hardware install the tapered end into the new Fabtech bracket. Torque to 127 ft-lbs. **SEE FIGURE 29**

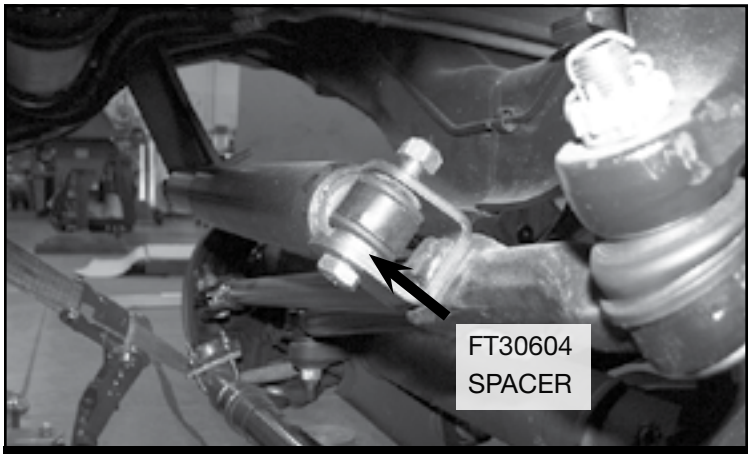

FIGURE 29 - STEP 30

31. Install FT30630 (Driver) & FT30629 (Passenger) Sway bar drop brackets using the factory hardware. Torque to 35 ft-lbs. Reinstall the front sway bar to the end links using the supplied 7/16" hardware torque all hardware to 83 ft-lbs. Reconnect the sway bar to the end links. Torque to 59 ft-lbs **SEE FIGURE 30**

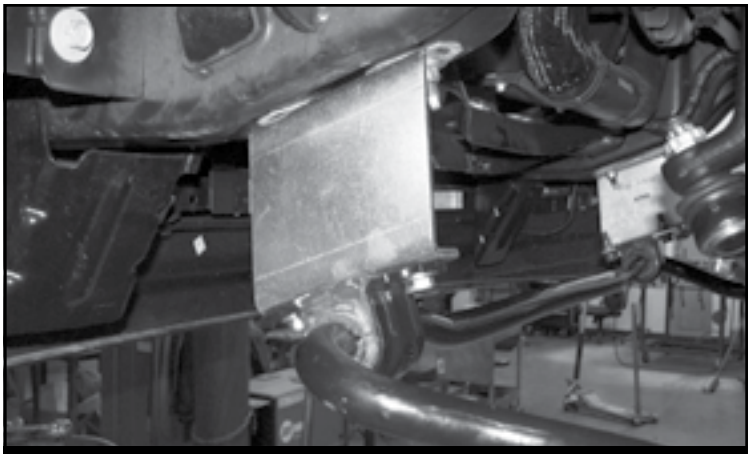

FIGURE 30 - STEP 31

32. Install the lower brake line bracket to the lower spring perch using the factory hardware. Torque to 29 ft-lbs.

33. Install the front tires and wheels. Torque lug nuts to wheel manufacturer's specifications.

REAR SUSPENSION

34. Locate and install the rear lift blocks FTBK54D & P. The factory block will need to be removed. The short end of the blocks should face to the front of the vehicle. Using the supplied u-bolts, nuts and washers align axle, lift blocks and springs and torque to U-Bolts to 170 ft-lbs. **SEE FIGURE 31**

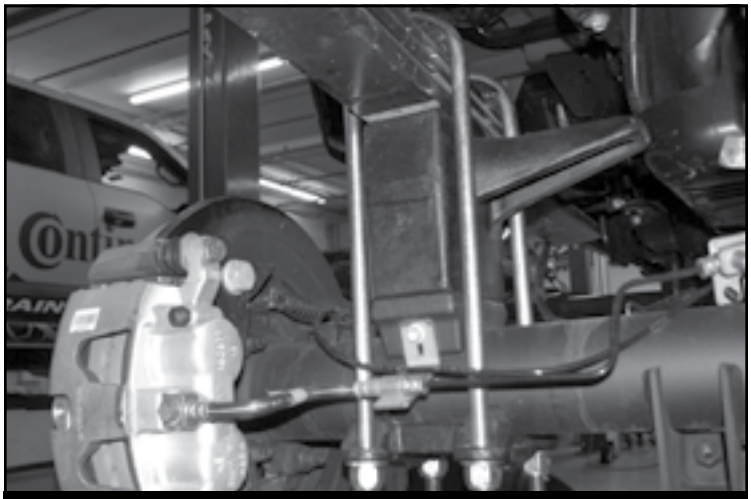

FIGURE 31 - STEP 34

35. Install the new rear shocks FTS7266, FTS6063 or DL FTS810052 using the factory hardware, torque the upper mount 46 ft-lbs. and the lower mount to 66 ft-lbs.

36. Install tires and wheels and torque lug nuts to wheel manufacturer's specifications. Turn front tires left to right and check for appropriate tire clearance. **Note - Some oversized tires may require trimming of the front bumper & valance.**

37. Check front end alignment and set to factory specifications. Readjust headlights.

38. Recheck all bolts for proper torque.

39. Recheck brake hoses, ABS wires and suspension parts for proper tire clearance while turning tires fully left to right.

40. Check the fluid in the front and rear differential and fill if needed with factory specification differential oil. **Note - some differentials may expel fluid after filling and driving. This can be normal in resetting the fluid level with the new position of the differential/s.**

41. Install Driver Warning Decal. Complete product registration card and mail to Fabtech in order to receive future safety and technical bulletins on this suspension.

Vehicles that will receive oversized tires should check ball joints, uniballs and all steering components every 2500-5000 miles for wear and replace as required.

RE-TORQUE ALL NUTS, BOLTS AND LUGS AFTER 50 MILES AND PERIODICALLY THEREAFTER.

For technical assistance call: **909-597-7800**

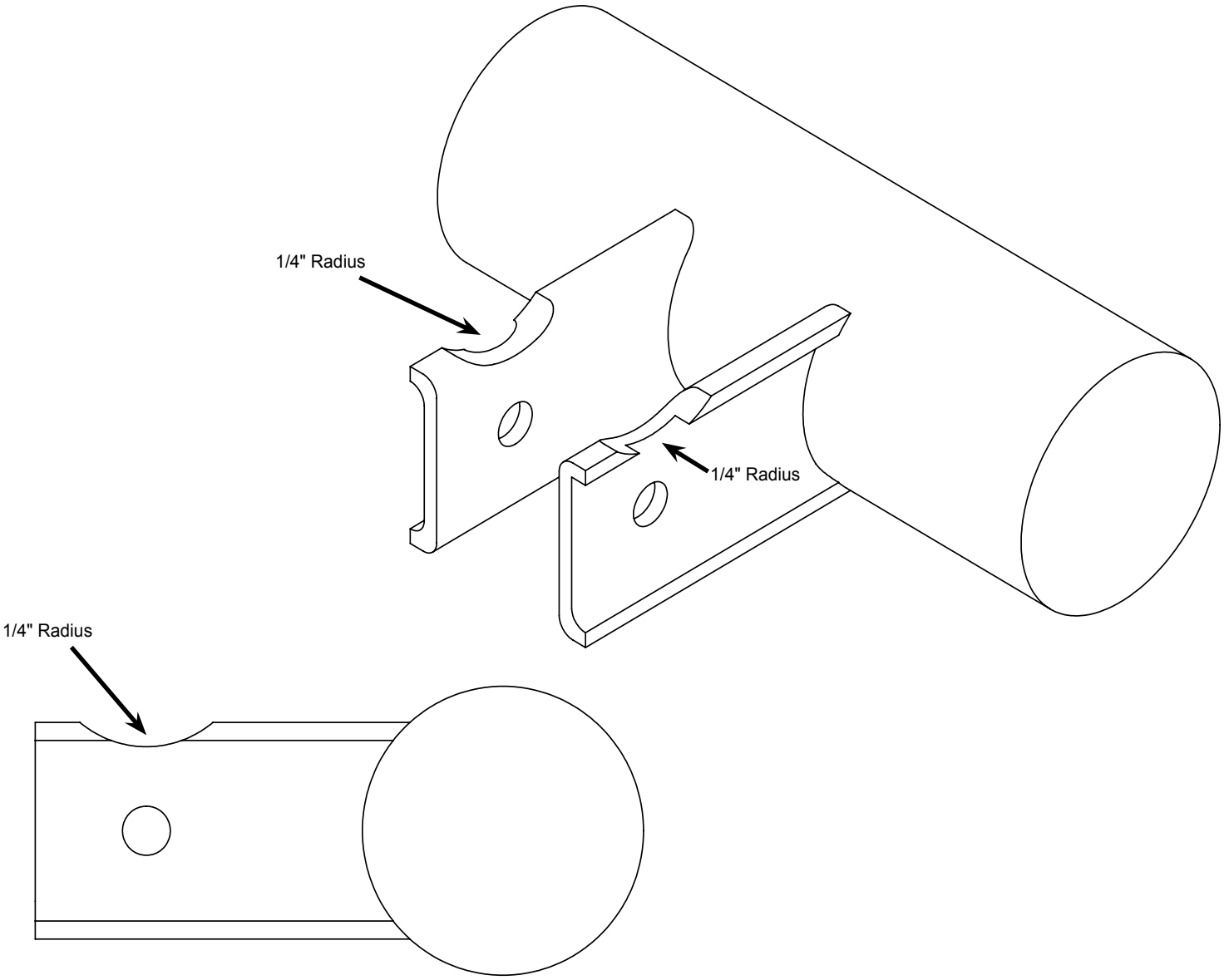
1/4" Radius
1/4" Radius
1/4" Radius

- Product Warranty and Warnings -

Fabtech provides a Limited Lifetime Warranty to the original retail purchaser who owns the vehicle, on which the product was originally installed, for defects in workmanship and materials.

The Limited Lifetime Warranty excludes the following Fabtech items; bushings, bump stops, ball joints, tie rod ends, limiting straps, cross shafts, heim joints and driveshafts. These parts are subject to wear and are not considered defective when worn. They are warranted for 60 days from the date of purchase for defects in workmanship.

Dirt Logic and Performance Coilover take apart shocks are considered a serviceable shock with a one year warranty on leakage only. Service seal kits are available separately for future maintenance. All other shocks are covered under our Limited Lifetime Warranty.

Fabtech does not warrant any product for finish, alterations, modifications and/or installation contrary to Fabtech's instructions. Alterations to the finish of the parts including but not limited to painting, powder coating, plating and/or welding will void all warranties. Some finish damage may occur to parts during shipping, which is considered normal and is not covered under warranty.

Fabtech products are not designed nor intended to be installed on vehicles used in race applications or for racing purposes or for similar activities. (A "RACE" is defined as any contest between two or more vehicles, or any contest of one or more vehicle against the clock, whether or not such contest is for a prize). This warranty does not include coverage for police or taxi vehicles, race vehicles, or vehicles used for government or commercial purposes. Also excluded from this warranty are sales outside of the United States of America.

Installation of most suspension products will raise the center of gravity of the vehicle and will cause the vehicle to handle differently than stock. It may increase the vehicle's susceptibility to a rollover, on road and off road, at all speeds. Extreme care should be taken to operate the vehicle safely at all times to prevent rollover or loss of control resulting in serious injury or death. Fabtech front end Desert Guards may impair the deployment or operation of vehicles equipped with supplemental restraining systems/air bag systems and should not be installed if the vehicle is equipped as so.

Fabtech makes every effort to ensure suspension product compatibility with all vehicles listed on the website, but due to unknown auto manufacturer's production changes and/or inconstancies by the auto manufacturer, Fabtech cannot be responsible for 100% compatibility, including the fitment of tire and wheel sizes listed. The Tire and Wheel sizes listed in Fabtech's website are only a guideline for street driving with noted fender trimming. Fabtech is not responsible for damages to the vehicle's body or tires. Fabtech is not responsible for premature wear of factory components due to the installation of oversized tires and wheels.

Fabtech's obligation under this warranty is limited to the repair or replacement, at Fabtech option, of the defective product only. All costs of removal, installation or re-installation, freight charges, incidental or consequential damages are expressly excluded from this warranty. Fabtech is not responsible for damages and/or warranty of other vehicle parts related or non related to the installed Fabtech product. This warranty is expressly in lieu of all other warranties expressed or implied. This warranty shall not apply to any product that has been subject to accident, negligence, alteration, abuse or misuse as determined by Fabtech.

Fabtech suspension components must be installed as a complete system including shocks as shown on our website. All warranties will become void if Fabtech parts are combined and/or substituted with other aftermarket suspension products. Combination and/or substitution of other aftermarket suspension parts may cause premature wear and/or product failure resulting in an accident causing injury or death. Fabtech does not warrant products not manufactured by Fabtech.

Depending on the condition of the factory suspension components retained after the installation of a Fabtech suspension not all vehicles may have the same ride stance front to rear as described in the website. The blue color of suspension components shown in all Fabtech photographs are for display purposes only. Majority of all Fabtech components will be black specifically where noted with part numbers ending in BK.

Installation of Fabtech product may void the vehicles factory warranty; it is the consumer's responsibility to check with their local vehicle's dealer for warranty disposition before the installation of the product. Some state laws may prohibit modification of suspension to a vehicle in whole or in part. It is the responsibility of the installer and consumer to consult local laws prior to the installation of any Fabtech suspension product to comply with such written laws.

It is the responsibility of the distributor and/or the retailer to review all warranties and warnings of Fabtech products with the consumer prior to purchase.

Fabtech reserves the right to super cede, discontinue, change the design, finish, part number and/or application of parts when deemed necessary without written notice. Fabtech is not responsible for misprints or typographical errors within the website or price sheet. For the most recent Product Warranty and Warnings visit our website www.fabtechmotorsports.com